www.IMBALLAGGISERVICE.com

IMBALLAGGI SERVICE
AUTOMATIC PACKAGING SYSTEM

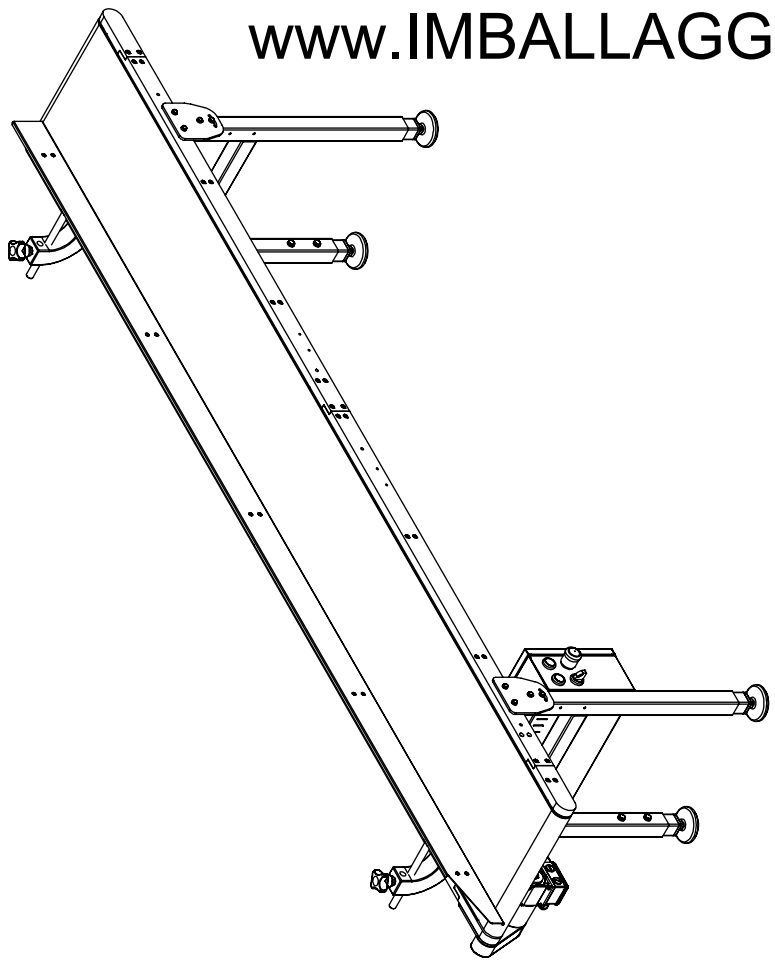

POWER SUPPLY	:	1PH+N+PE 200-240V 50-60Hz 0,5A
MACHINE INSTALLED POWER	:	180 W
SPEED	:	6.7-26,3 m/min

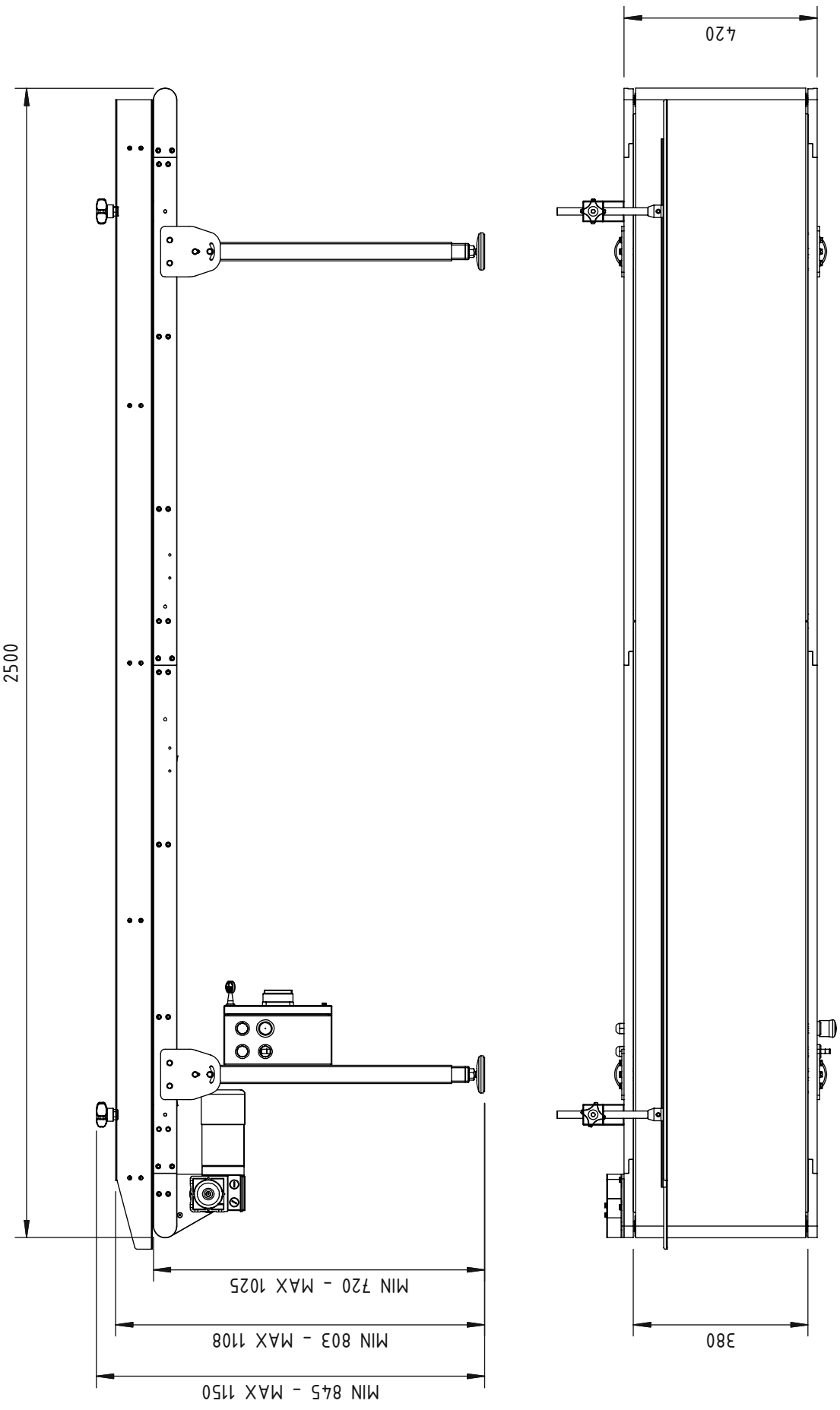

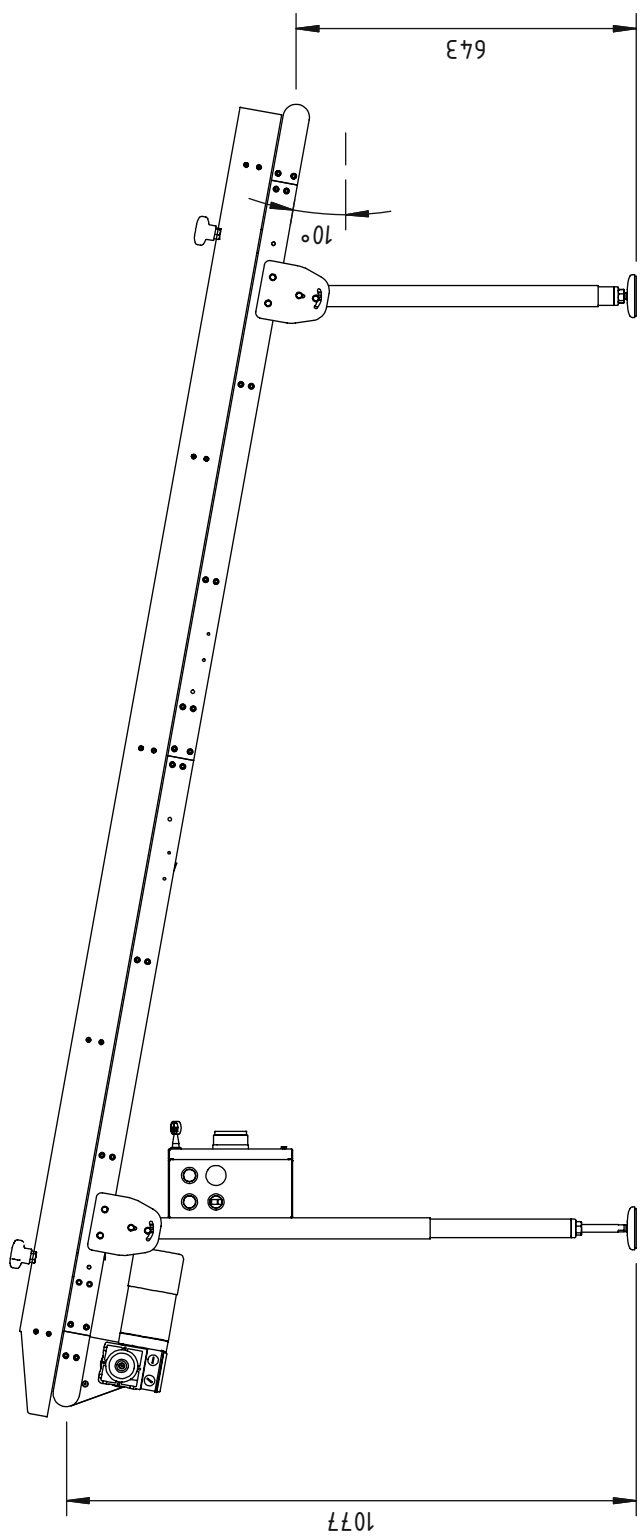

RLAZZARINI	18/04/2006	A
AUTORE	DATA	REV
CRONOLOGIA REVISIONE		